GRAYS
WINDOW BLINDS

SKYE

ROOF BLINDS

- Easy Installation
- Compatible With A Variety Of Roof Windows; Including Velux, New Generation Velux, Dakstra, Rooflite, Fakro & Keylite
- Optimum Light Control
- Wide Range Of Fabrics To Choose From
- Reduces Heat Loss/ Heat Gain
- Aluminium Or White Finish Available For Fascia, Side Guide & Bottom Bar

Blind Contents

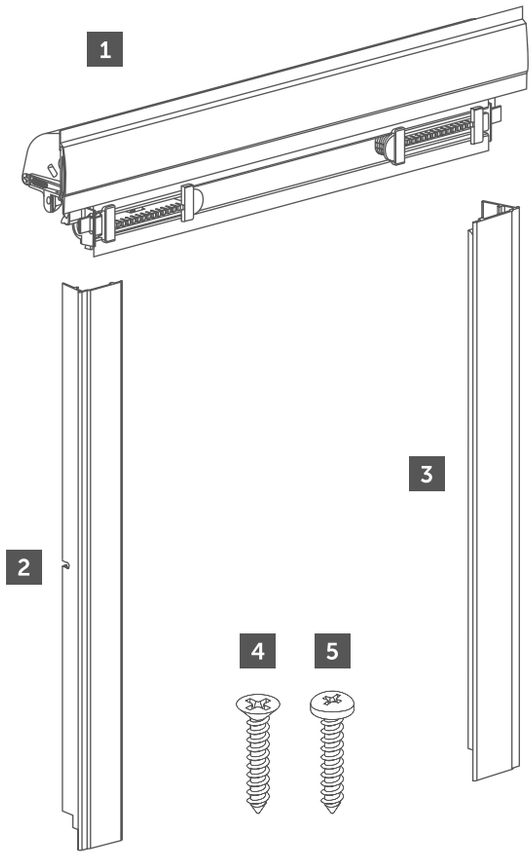

1 Headbox
2 Left Side Channel
3 Right Side Channel
4 4 x Countersunk Screws
5 2 x Pan Head Screws (Optional)

Tools Required

Screw Driver

2mm Allen Key
(Included)

Step 1

Peel The Backing From The Red
Double Sided Tape On The Headbox.

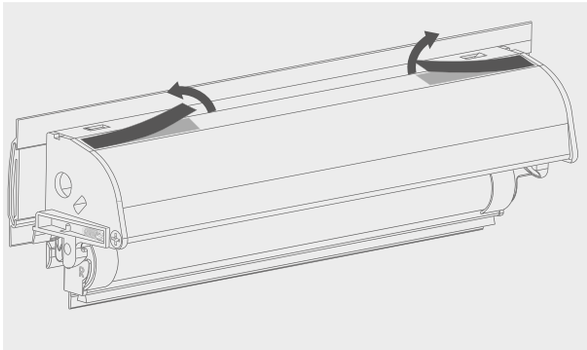

Step 2

Secure Headbox To Top Of Window
Using Double Sided Tape

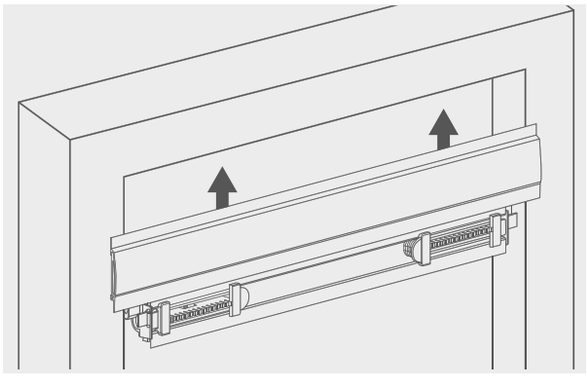

Step 3

Secure Headbox To Window Frame At Each Side
Using Countersunk Screws

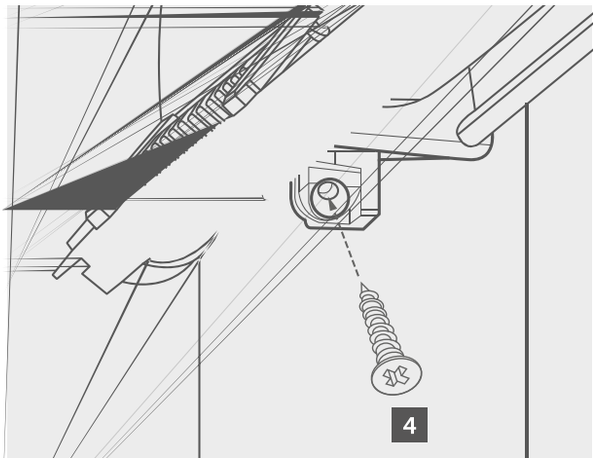

Step 4

Slide The Right Side Channel At A 30 Degree Angle Onto The Bottom Bar End Cap To Ensure Position Under The Headbox Lip

Push The Lower End Of The Side Guide Into Position Against The Edge Of The Window

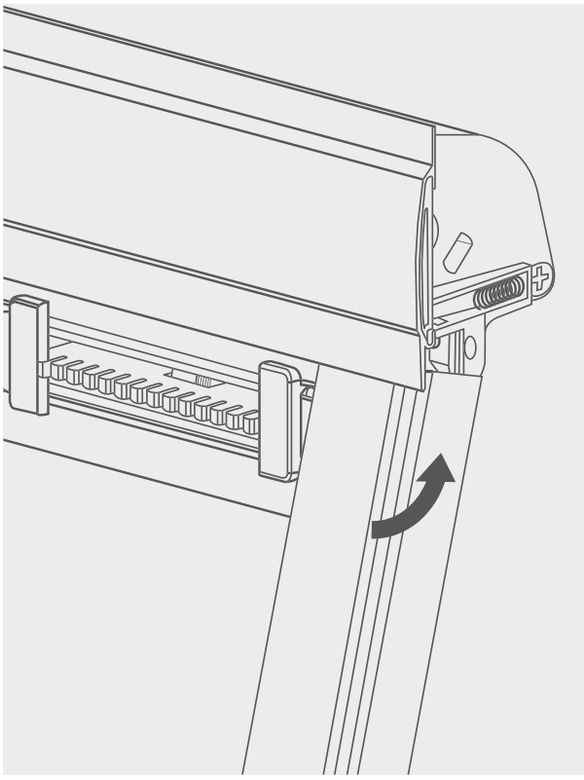

Final Position

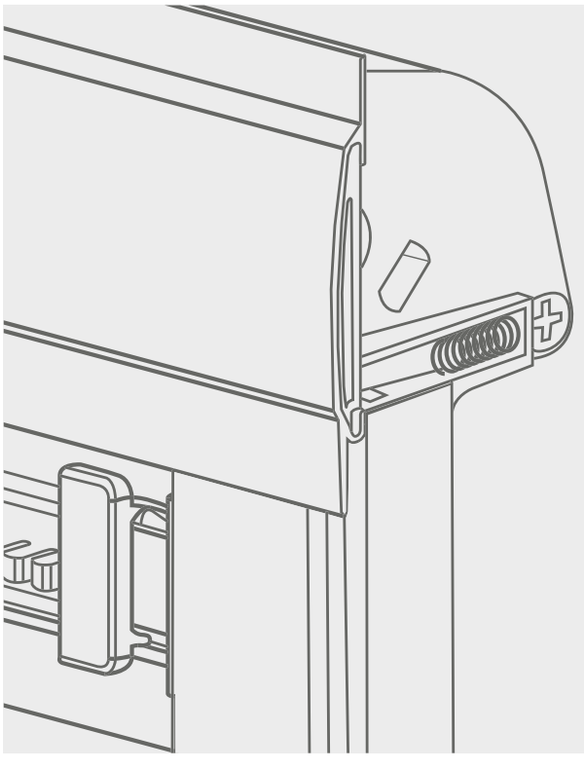

Step 5

Secure The Side Guides Into Position Using The Countersunk Screws Provided

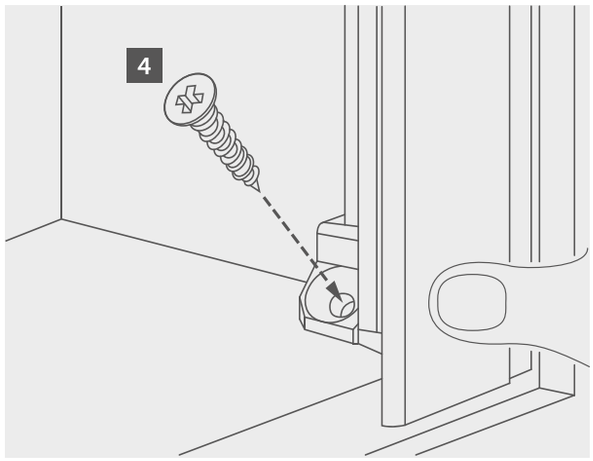

Repeat Steps 4 + 5 For Left Side Channel

Step 6

For larger Windows (04 Or Bigger) Additional Fixing Pan Head Screws Are Supplied

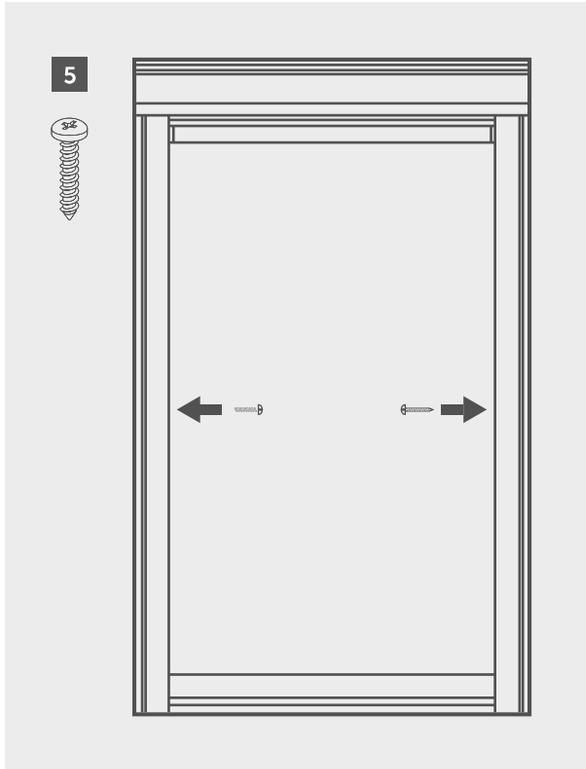

Step 7

Remove The Red Cord Retainers, Unwind The Cord & Dispose Of The Cord Retainers.

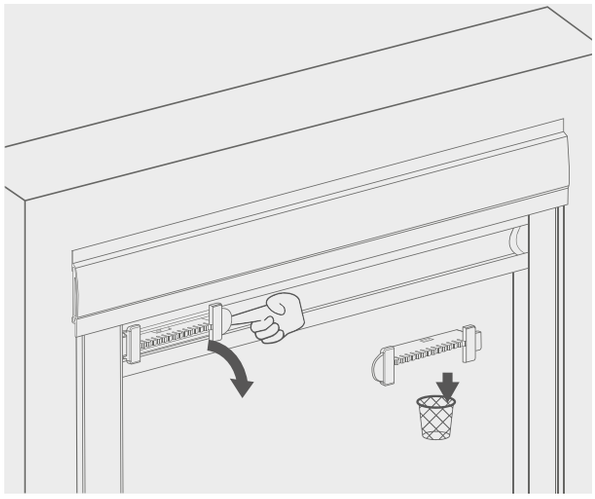

Step 8

Pull Cord To Bottom Of Side Of Channel & Secure Cord Stop In The Locking Mechanism. Trim Excess Cord To 1.5cm Once The Blind Is Working Correctly.

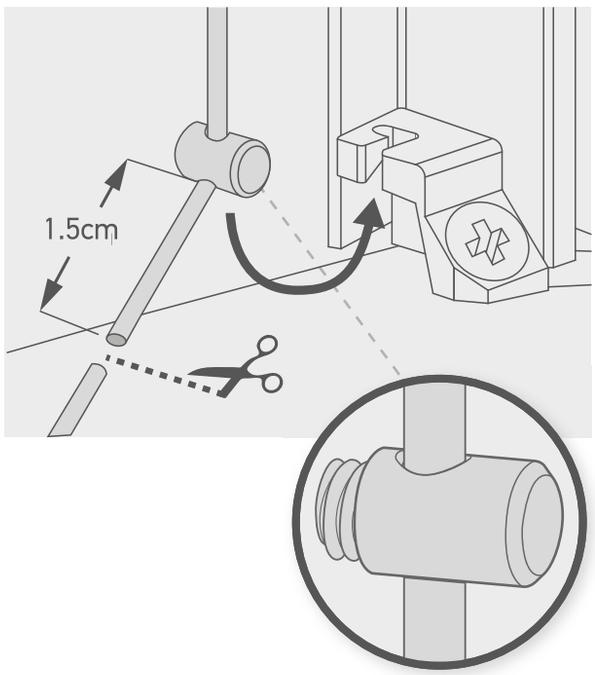

Fig 8A: Cord Stop

Troubleshooting

The Blind Is Supplied Pre-Tensioned However, Should This Need Adjusted, Please Adjust As Follows:

1. Use The 2mm Allen Key Supplied To Adjust The Cord Stops (See Fig 8A)

2. If The Blind Does Not Stay In Position Or Raises On Its Own Accord. Add Tension To The Cord And Adjust To The Marking On The Cord Stop.

3. If The Blind Is Difficult To Open Or Close, Adjust The Position On Cord Stop To The Lower Marking. NB - Ensure The Bottom Bar Is Level.

4. If The Bottom Bar Is Not Level Adjust The Cord Stop Tension. To Do This, Remove It From Locking Mechanism & Adjust Accordingly.

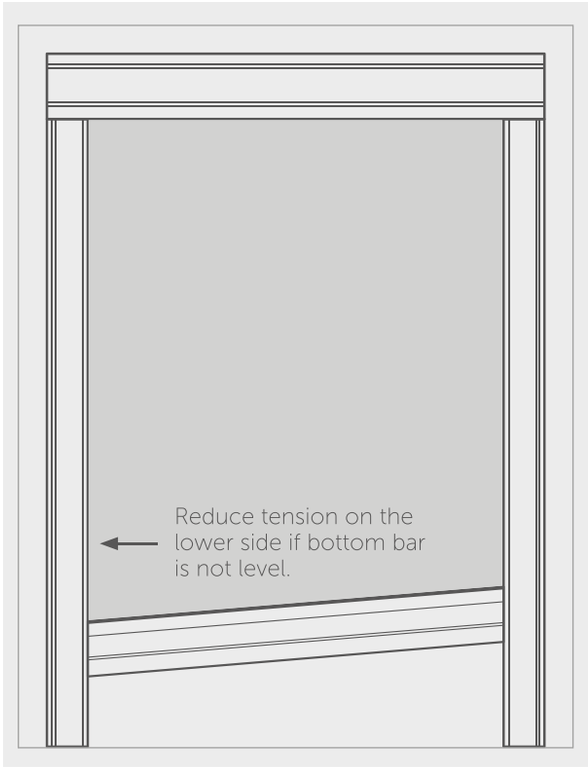

SKYE

ROOF WINDOW BLINDS

FITTING INSTRUCTIONS